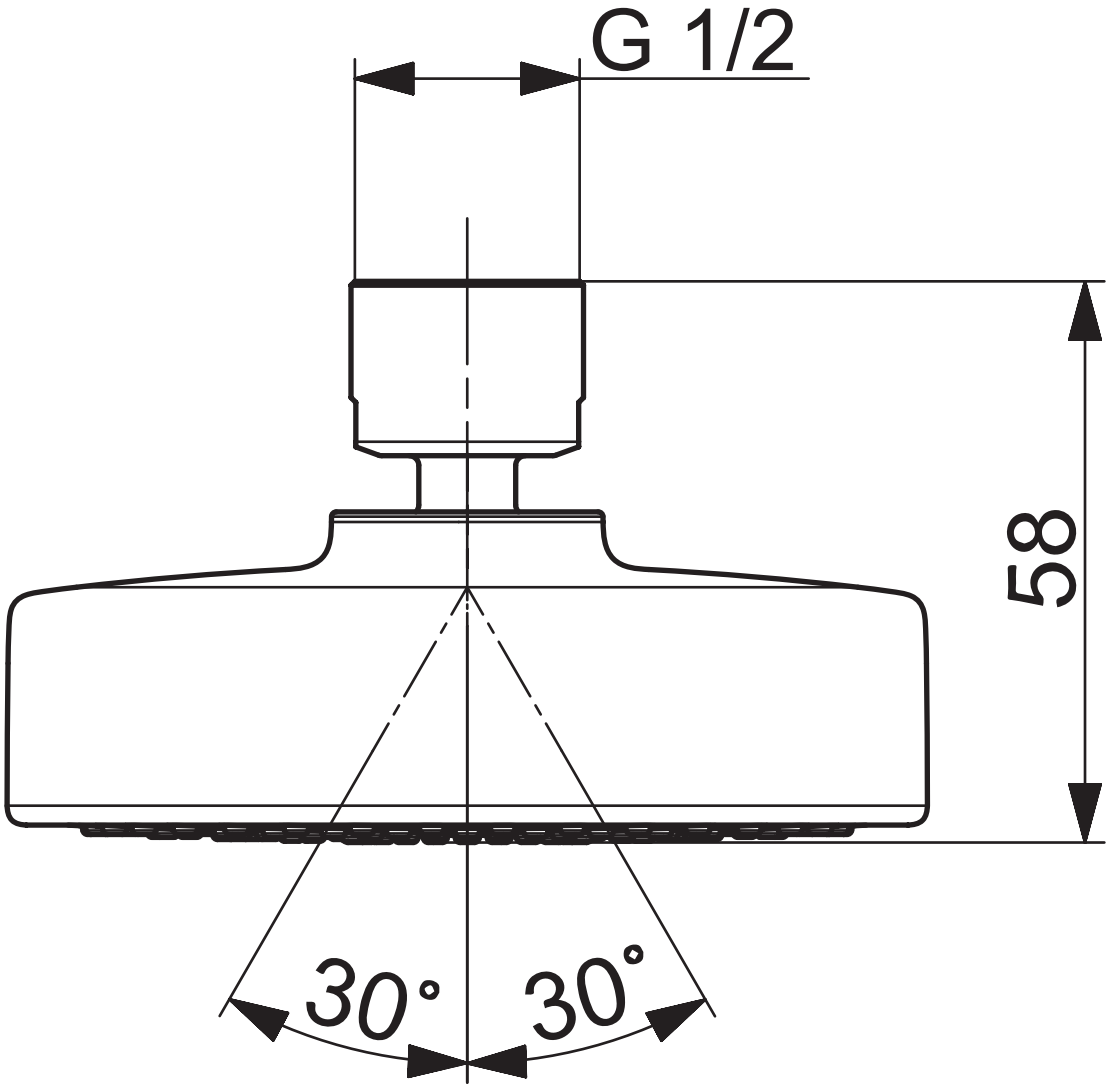
G 1/2
58
30°
30°

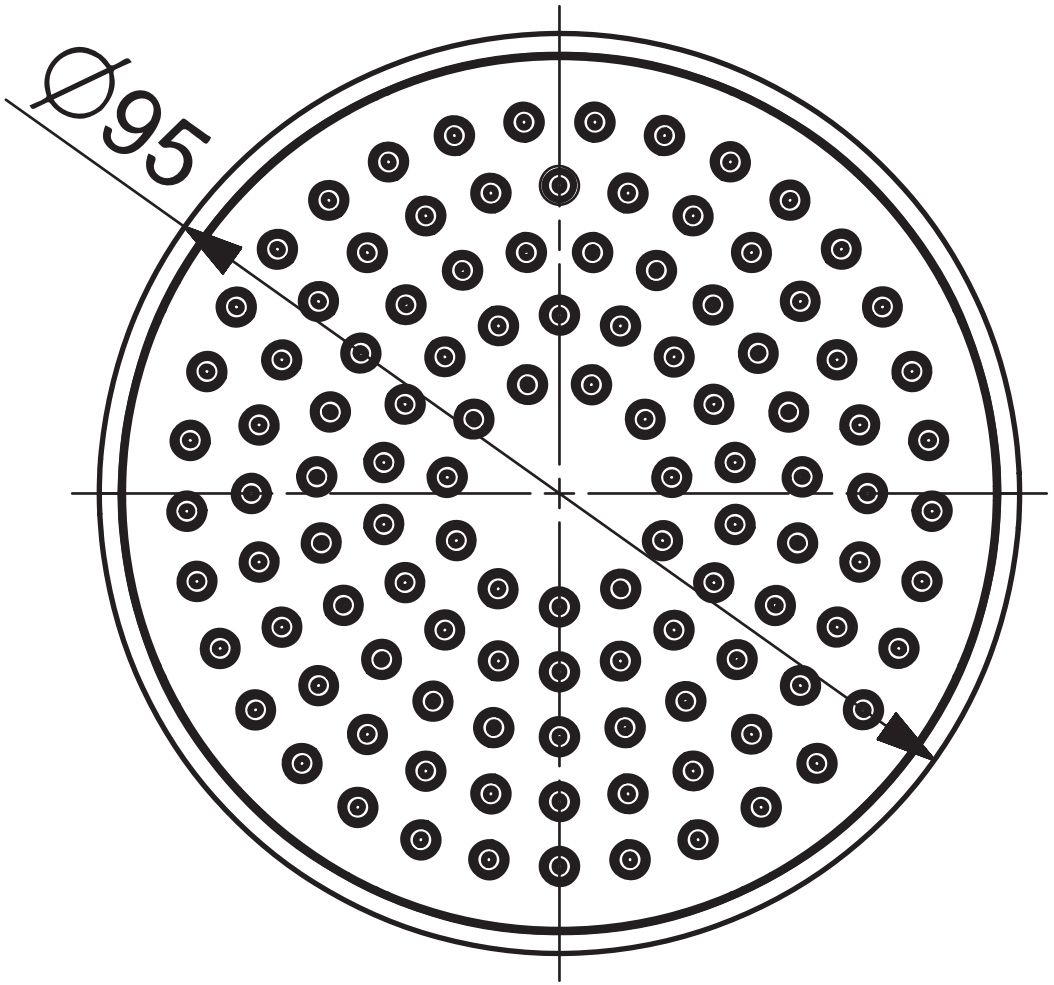
Ø95