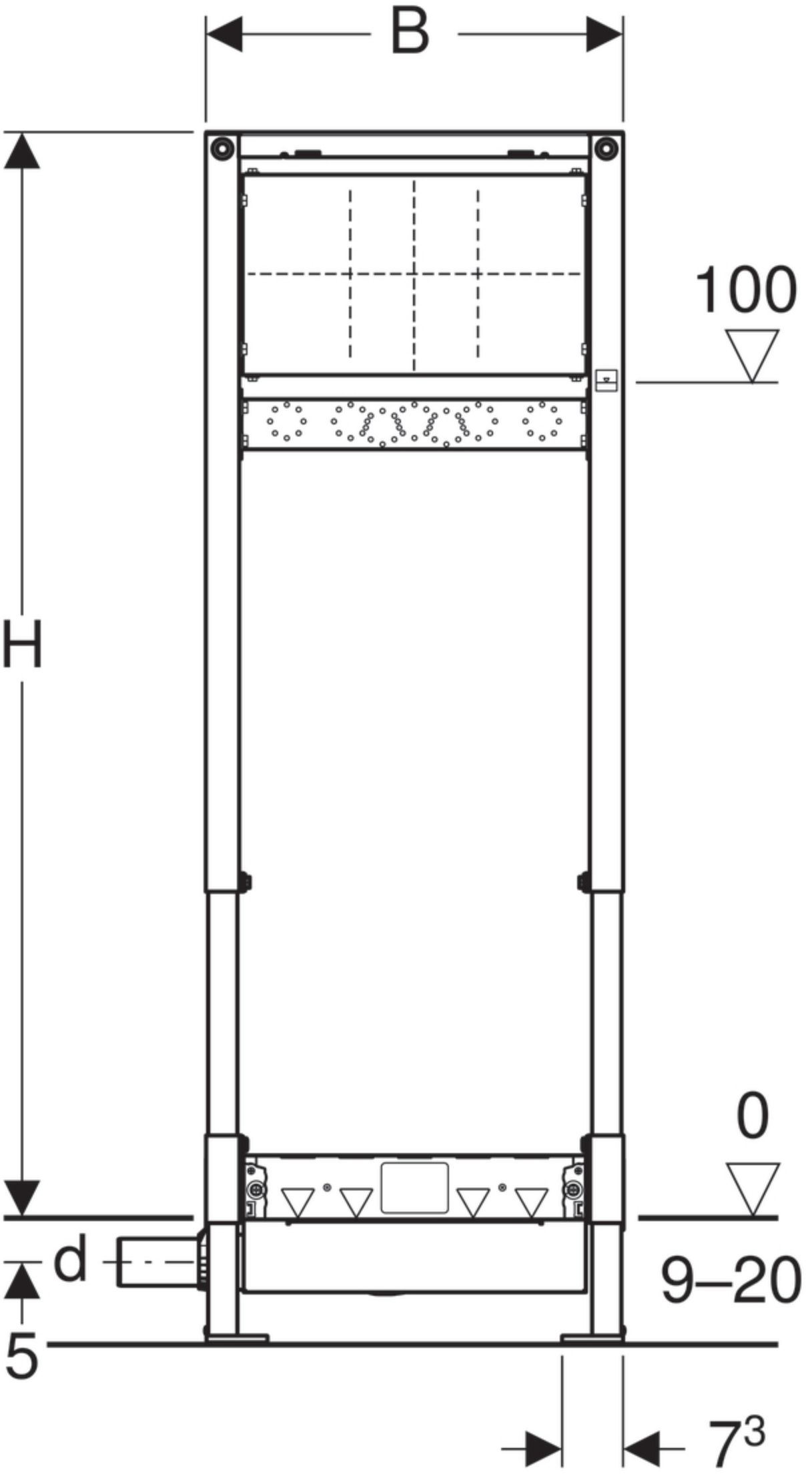
B
100
H
0
d
9–20
5
7³